photoelectric sensor
colour marking sensor
R58ECRGB1Q

Industrial Automation

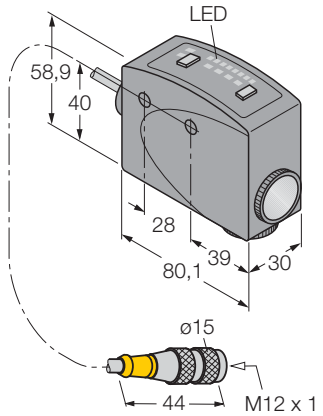

- **30 ms adjustable on and off delay**
- **light or dark operation**
- **automatic selection of red, green and blue light**
- **parallel detection field relative to the housing axis**
- **5-pole connector, M12X1**
- **light or dark operation**
- **Operating voltage 10…30 VDC**

Type	R58ECRGB1Q
Ident-No.	3075040
Operating mode	diffuse mode contrast sensor
Light type	red / green / blue
Focal distance	10 mm
Ambient temperature	-10…+ 55°C
Operating voltage	10… 30 VDC
DC rated operational current	≤ 100 mA
No-load current I_0	≤ 75 mA
Output function	NO contact, pnp/npn
Switching frequency	≤ 10kHz
Housing	rectangular, R58
Dimensions	80.1x 30x 58.9mm
Housing material	Metal, ZN
Lens	plastic, acrylic
Electrical connection	Connectors, M12 x 1
Protection class	IP67
Switching state	LED yellow
Excess gain indication	LED chain red

Wiring diagram

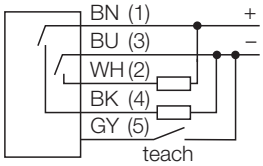

Functional principle

The colour mark sensor R58 Expert differentiates between all conventional colour contrasts which can occur with the product and material registration. The device automatically selects one of the three integrated colour transmitter LED´s in order to achieve the highest contrast ratio. The very short response time on 50 µs is especially suitable for high speed applications. The sensor can be set either by a push button or an externally via the teach line (gy) to contrast ratios, switch behaviour and time delays. Furthermore, the device can be taught to differentiate between ON and OFF state either statically before commissioning or dynamically during operation.

• Edition: • 11.09.2010