photoelectric sensor
laser sensor with two switching outputs
LT3BDLVQ

Industrial Automation

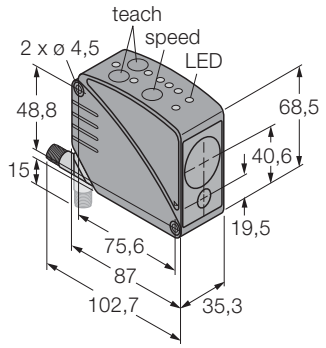

- **sensing range of opposed mode laser sensor up to 50 m (to reflector)**
- **adhesive reflector foil BRT-TVHG-8x10P (203x254 mm) included in scope of supply**
- **two independently adjustable switching ranges**
- **Operating voltage 12…24 VDC**
- **signal strength indication**

Type	LT3BDLVQ
Ident-No.	3067381
Operating mode	Retroreflective laser sensor (time-of-flight)
Light type	red
Wavelength	658 nm
Laser class	1 (EN 60825, IEC 60825)
Repeatability	4.5 mm
Range	500… 50000 mm
Ambient temperature	0…+ 50°C
Operating voltage	12… 24 VDC
DC rated operational current	≤ 100 mA
No-load current I_0	≤ 108 mA
Output function	2x NO, pnp/npn
Switching frequency	≤ 1kHz
Readiness delay	≤ 1 s
Housing	rectangular, LT3
Dimensions	87x 35.3x 68.5mm
Housing material	Plastic, ABS
Lens	plastic, acrylic
Electrical connection	Connectors, M12 x 1
Protection class	IP67
Operating voltage	LED green
Switching state	LED yellow

Wiring diagram

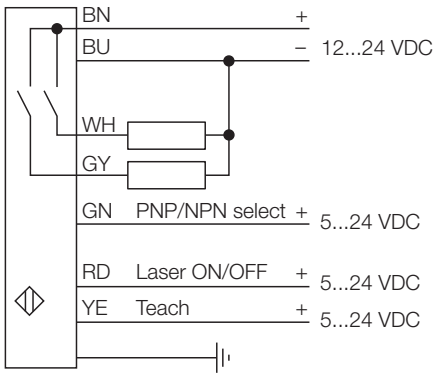

Functional principle

The LT3 uses pulsed time-of-flight technology to achieve unsurpassed performance. The laser pulses one million times per second. The microprocessor records the time required for each pulse to travel to the target and back to the sensor. Every millisecond, one thousand pulse times are averaged and the corresponding value is transferred to the output.

Resolution versus distance

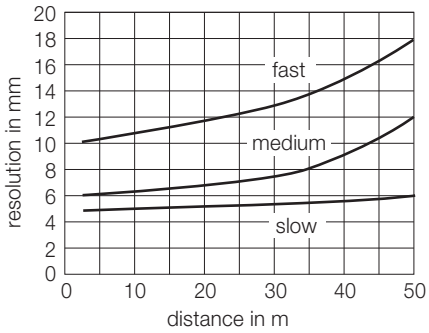

• Edition: • 11.09.2010