ONLINE DATA SHEET
www.mysick.com

Long range distance sensors
DME5000, PROFIBUS DP

DME5000-322

SICK
Sensor Intelligence.

Long range distance sensors
DME5000, PROFIBUS DP

Model Name > DME5000-322
Part No. > 1025247

At a glance

- Measurement range from 0.15 m to 300 m
- Very fast measurement cycles
- Highest accuracy, repeatability and system availability
- Illuminated LC display with diagnostic information
- Visible red light and bracket with springs for alignment
- Variety of interfaces: SSI, RS-422, PROFIBUS, HIPERFACE, DeviceNet

Your benefits

- Fastest measurement rate offers optimized integration into control loops for increased productivity
- Red laser light as well as adjustable mounting brackets (optional accessory) enable fast and easy alignment, ensuring on-time and cost-effective installation
- Multi-point self checks provide maintenance and replacement warnings increasing overall machine availability
- A tough, metal housing as well as heating and cooling accessories ensure reliability in rough ambient conditions
- User-friendly display with easy-to-use menu along with external PC/PLC programming offers fast and cost-efficient setup
- Multiple serial interfaces provide high-speed position output to the controller and high flexibility in application integration
- Integrated speed monitoring offers additional information for increased process reliability
- Highest degree of accuracy and repeatability ensures high machine availability

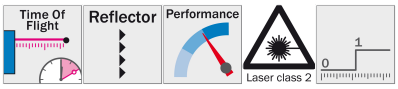

Performance

Measuring range [1]:	0.15 m ... 300 m, on reflective tape "Diamond Grade"
Resolution:	0.05 mm ... 5 mm
Repeatability [2]: [3]:	2 mm
Accuracy:	± 5 mm
Light source [4]:	Laser, red
Typ. light spot size (distance):	130 mm (at 70 m) 270 mm (at 150 m) 360 mm (at 220 m)
Output rate:	2 ms
Max. movement speed:	10 m/s
Laser class:	2 (EN 60825-1/CDRH)

© SICK AG. Subject to change without notice.

[1] [2] On reflective tape "Diamond Grade" [3] Statistical error 1 σ, environmental conditions constant, min. warm-up time 10 min [4] Average service life of 50,000 h at T_A = +25 °C

Interfaces

Data interface:	PROFIBUS DP
Output type [1]:	Push-pull: PNP/NPN (100 mA)
Multifunctional input (MF) [2]: [3]:	1 x MF

[1] HIGH = > V_S - 3 V/LOW = < 2 V [2] HIGH = > 12 V/LOW = < 3 V [3] Not reverse-polarity protected

Mechanics/electronics

Supply voltage Vs:	DC 18 V ... 30 V, limit values
Ripple [1]:	< 5 Vpp
Initialization time [2]:	1.5 s
Indication:	Display
Weight:	Ca. 1,650 g
Output current IA [3]:	≤ 100 mA
Power consumption:	At 24 V DC < 1,000 mA
Connection type:	Male connector, 2 x M12, 5-pin, B-coded, 1 x M16, 8-pin, B-coded

[1] May not fall short of or exceed V_S tolerances [2] After loss of reflector < 1 s at max. speed V_{max} < 1 m/s [3] Short circuit/overload protected. Max. 100 nF/20 mH

Ambient data

Enclosure rating:	IP 65
Protection class [1]:	II
Effect of air pressure:	0.3 ppm/hPa
Effect of air temperature:	1 ppm/K
Temperature drift:	Typ. 0.1 mm/K
Ambient temperature:	Operation with heating: -40 ... 55 °C Operation with cooling case: -40 ... 75 °C Storage: -25 ... 75 °C
Mechanical load:	Noise: EN 600 68-2-64 Shock: EN 600 68-2-27/-2-29 Sine: EN 600 68-2-6
Electromagnetic compatibility (EMC):	EN 61000-6-2, EN 55011

[1] Reference voltage DC 32 V

© SICK AG. Subject to change without notice.

Dimensional drawing

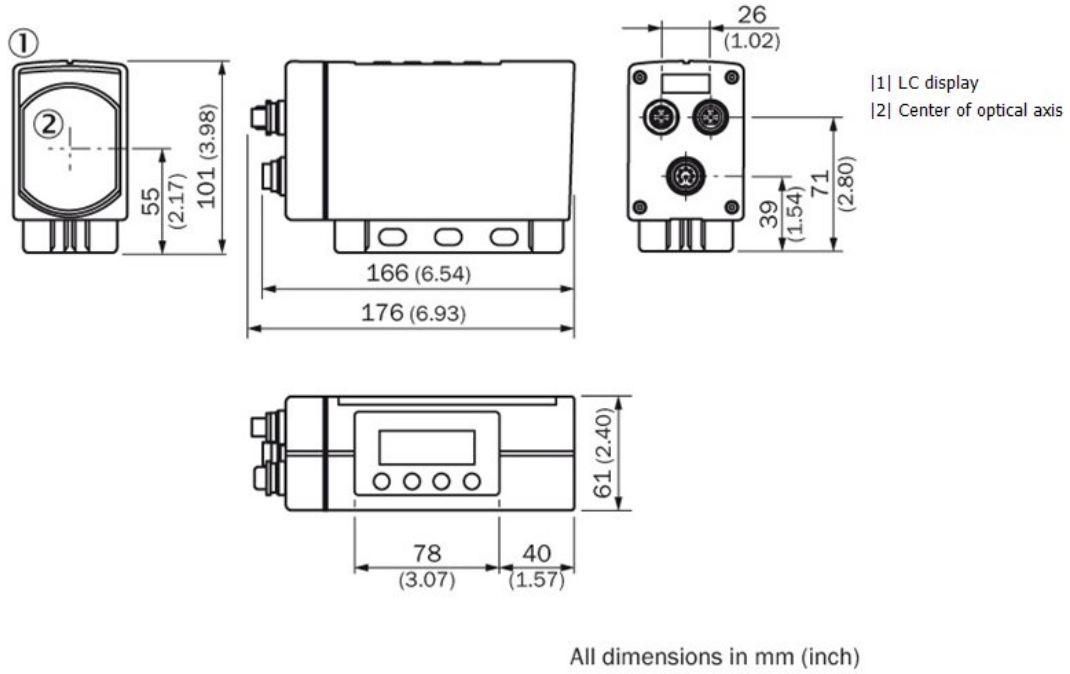

Adjustments

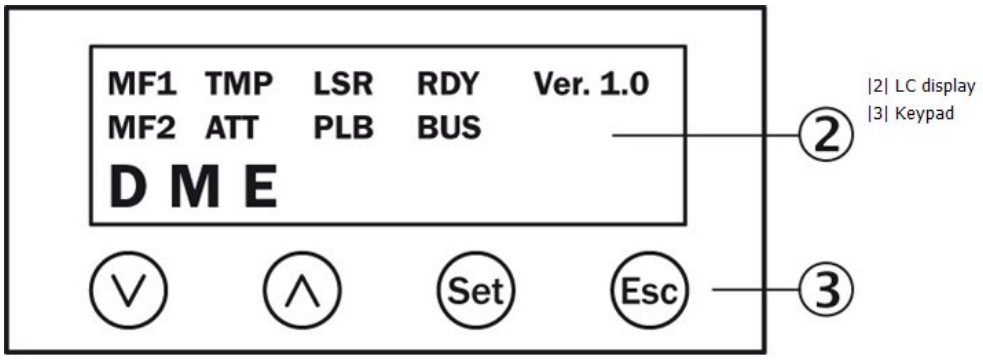

Connection type

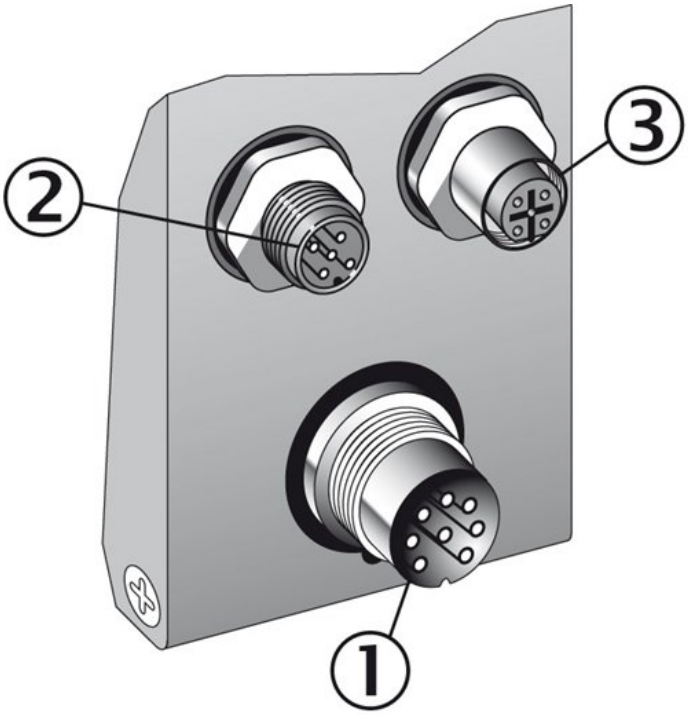

|1| Connector M16, 8-pin
|2| Connector M12, 5-pin, B-coded, BUS IN
|3| Connector M12, 5-pin, B-coded, BUS OUT

Connection diagram

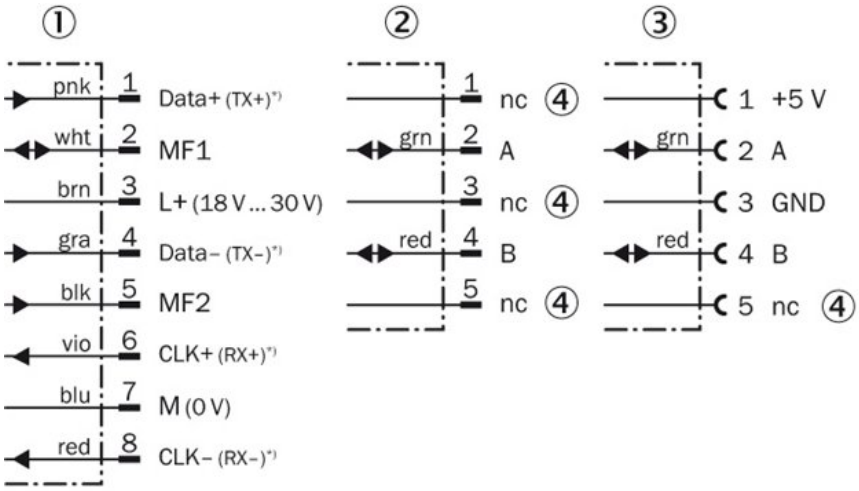

|1| Connector M16, 8-pin
|2| Connector M12, 5-pin, B-coded, BUS IN
|3| Connector M12, 5-pin, B-coded, BUS OUT
|4| not connected

*) For connection of interface adapter.

© SICK AG. Subject to change without notice.

A4 4c int43

Australia
Phone +61 3 9457 0600
1800 33 48 02 – tollfree
E-Mail sales@sick.com.au

Belgium/Luxembourg
Phone +32 (0)2 466 55 66
E-Mail info@sick.be

Brasil
Phone +55 11 3215-4900
E-Mail marketing@sick.com.br

Canada
Phone +1 905 771 14 44
E-Mail information@sick.com

Česká republika
Phone +420 2 57 91 18 50
E-Mail sick@sick.cz

China
Phone +86 4000 121 000
E-Mail info.china@sick.net.cn
Phone +852-2153 6300
E-Mail ghk@sick.com.hk

Danmark
Phone +45 45 82 64 00
E-Mail sick@sick.dk

Deutschland
Phone +49 211 5301-301
E-Mail info@sick.de

España
Phone +34 93 480 31 00
E-Mail info@sick.es

France
Phone +33 1 64 62 35 00
E-Mail info@sick.fr

Great Britain
Phone +44 (0)1727 831121
E-Mail info@sick.co.uk

India
Phone +91–22–4033 8333
E-Mail info@sick-india.com

Israel
Phone +972-4-6881000
E-Mail info@sick-sensors.com

Italia
Phone +39 02 27 43 41
E-Mail info@sick.it

Japan
Phone +81 (0)3 5309 2112
E-Mail support@sick.jp

Magyarország
Phone +36 1 371 2680
E-Mail office@sick.hu

Nederland
Phone +31 (0)30 229 25 44
E-Mail info@sick.nl

Norge
Phone +47 67 81 50 00
E-Mail sick@sick.no

Österreich
Phone +43 (0)22 36 62 28 8-0
E-Mail office@sick.at

Polska
Phone +48 22 837 40 50
E-Mail info@sick.pl

România
Phone +40 356 171 120
E-Mail office@sick.ro

Russia
Phone +7-495-775-05-30
E-Mail info@sick.ru

Schweiz
Phone +41 41 619 29 39
E-Mail contact@sick.ch

Singapore
Phone +65 6744 3732
E-Mail sales.gsg@sick.com

Slovenija
Phone +386 (0)1-47 69 990
E-Mail office@sick.si

South Africa
Phone +27 11 472 3733
E-Mail info@sickautomation.co.za

South Korea
Phone +82 2 786 6321/4
E-Mail info@sickkorea.net

Suomi
Phone +358-9-25 15 800
E-Mail sick@sick.fi

Sverige
Phone +46 10 110 10 00
E-Mail info@sick.se

Taiwan
Phone +886 2 2375-6288
E-Mail sales@sick.com.tw

Türkiye
Phone +90 (216) 528 50 00
E-Mail info@sick.com.tr

United Arab Emirates
Phone +971 (0) 4 88 65 878
E-Mail info@sick.ae

USA/México
Phone +1(952) 941-6780
1 (800) 325-7425 – tollfree
E-Mail info@sickusa.com

More representatives and agencies
at **www.sick.com**