ONLINE DATA SHEET
www.mysick.com

# Long range distance sensors
# DME5000, PROFIBUS DP

DME5000-212

SICK
Sensor Intelligence.

# Long range distance sensors
# DME5000, PROFIBUS DP

**Model Name** > DME5000-212
**Part No.** > 1024082

## At a glance

- Measurement range from 0.15 m to 300 m
- Very fast measurement cycles
- Highest accuracy, repeatability and system availability
- Illuminated LC display with diagnostic information
- Visible red light and bracket with springs for alignment
- Variety of interfaces: SSI, RS-422, PROFIBUS, HIPERFACE, DeviceNet

## Your benefits

- Fastest measurement rate offers optimized integration into control loops for increased productivity
- Red laser light as well as adjustable mounting brackets (optional accessory) enable fast and easy alignment, ensuring on-time and cost-effective installation
- Multi-point self checks provide maintenance and replacement warnings increasing overall machine availability
- A tough, metal housing as well as heating and cooling accessories ensure reliability in rough ambient conditions
- User-friendly display with easy-to-use menu along with external PC/PLC programming offers fast and cost-efficient setup
- Multiple serial interfaces provide high-speed position output to the controller and high flexibility in application integration
- Integrated speed monitoring offers additional information for increased process reliability
- Highest degree of accuracy and repeatability ensures high machine availability

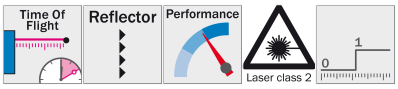


## Performance

| | |
|---|---|
| Measuring range [1]: | 0.15 m ... 150 m, on reflective tape "Diamond Grade" |
| Resolution: | 0.05 mm ... 5 mm |
| Repeatability [2]: [3]: | 1 mm |
| Accuracy: | ± 3 mm |
| Light source [4]: | Laser, red |
| Typ. light spot size (distance): | 130 mm (at 70 m)<br>270 mm (at 150 m)<br>360 mm (at 220 m) |
| Output rate: | 2 ms |
| Max. movement speed: | 10 m/s |
| Laser class: | 2 (EN 60825-1/CDRH) |


© SICK AG. Subject to change without notice.

[1] [2] On reflective tape "Diamond Grade" [3] Statistical error 1 σ, environmental conditions constant, min. warm-up time 10 min [4] Average service life of 50,000 h at $T_A$ = +25 °C

## Interfaces

| | |
|---|---|
| Data interface: | PROFIBUS DP |
| Output type [1]: | Push-pull: PNP/NPN (100 mA) |
| Multifunctional input (MF) [2]: [3]: | 1 x MF |

[1] HIGH = > $V_S$ - 3 V/LOW = < 2 V [2] HIGH = > 12 V/LOW = < 3 V [3] Not reverse-polarity protected

## Mechanics/electronics

| | |
|---|---|
| Supply voltage Vs: | DC 18 V ... 30 V, limit values |
| Ripple [1]: | < 5 Vpp |
| Initialization time [2]: | 1.5 s |
| Indication: | Display |
| Weight: | Ca. 1,650 g |
| Output current IA [3]: | ≤ 100 mA |
| Power consumption: | At 24 V DC < 250 mA |
| Connection type: | Male connector, 2 x M12, 5-pin, B-coded, 1 x M16, 8-pin, B-coded |

[1] May not fall short of or exceed $V_S$ tolerances [2] After loss of reflector < 1 s at max. speed $V_{max}$ < 1 m/s [3] Short circuit/overload protected. Max. 100 nF/20 mH

## Ambient data

| | |
|---|---|
| Enclosure rating: | IP 65 |
| Protection class [1]: | II |
| Effect of air pressure: | 0.3 ppm/hPa |
| Effect of air temperature: | 1 ppm/K |
| Temperature drift: | Typ. 0.1 mm/K |
| Ambient temperature: | Operation: -10 ... 55 °C<br>Operation with cooling case: -10 ... 75 °C<br>Storage: -25 ... 75 °C |
| Mechanical load: | Noise: EN 600 68-2-64<br>Shock: EN 600 68-2-27/-2-29<br>Sine: EN 600 68-2-6 |
| Electromagnetic compatibility (EMC): | EN 61000-6-2, EN 55011 |

[1] Reference voltage DC 32 V


© SICK AG. Subject to change without notice.

## Dimensional drawing

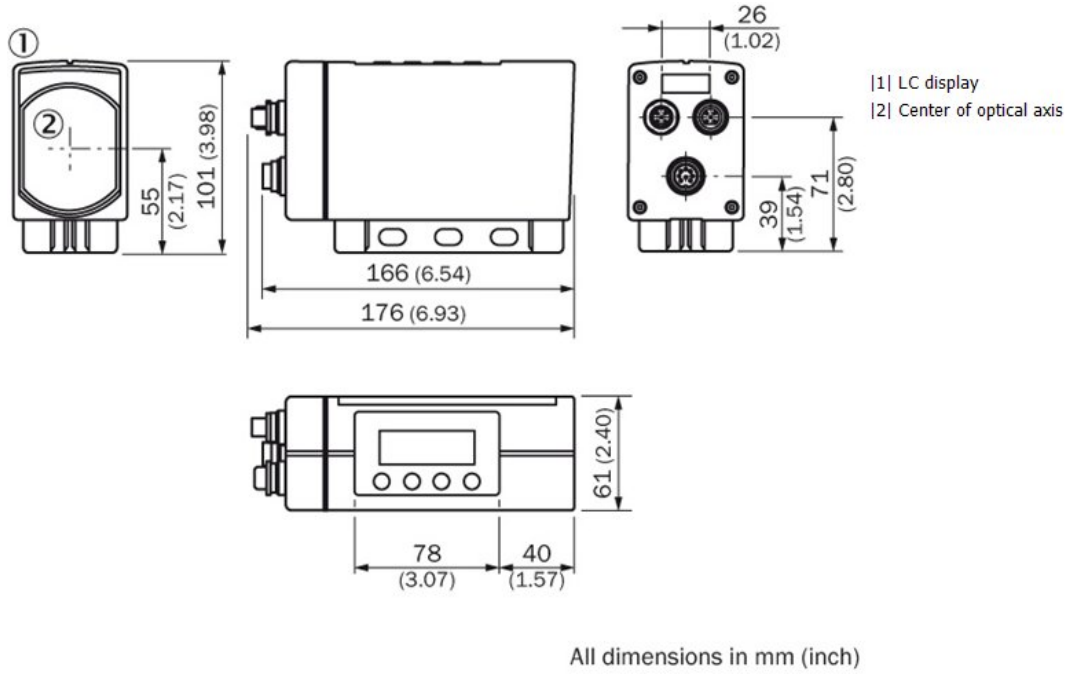


## Adjustments

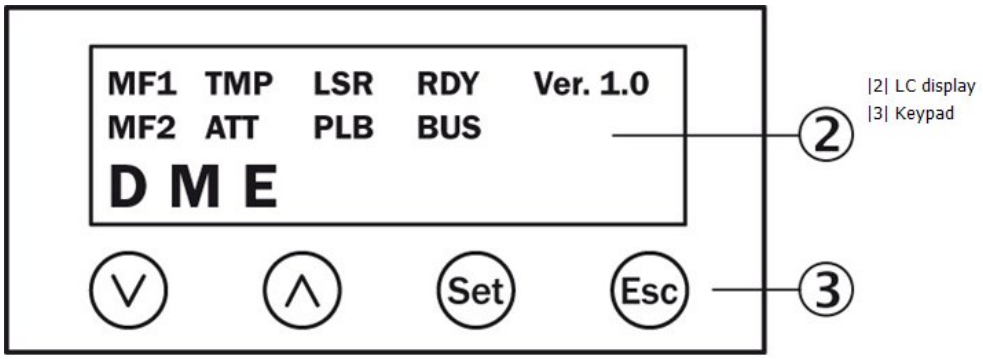

## Connection type

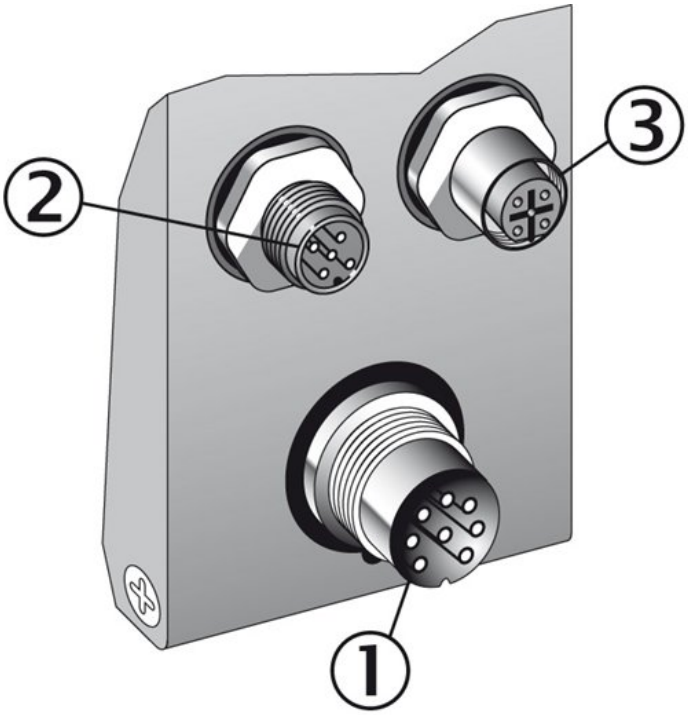


|1| Connector M16, 8-pin
|2| Connector M12, 5-pin, B-coded, BUS IN
|3| Connector M12, 5-pin, B-coded, BUS OUT

## Connection diagram

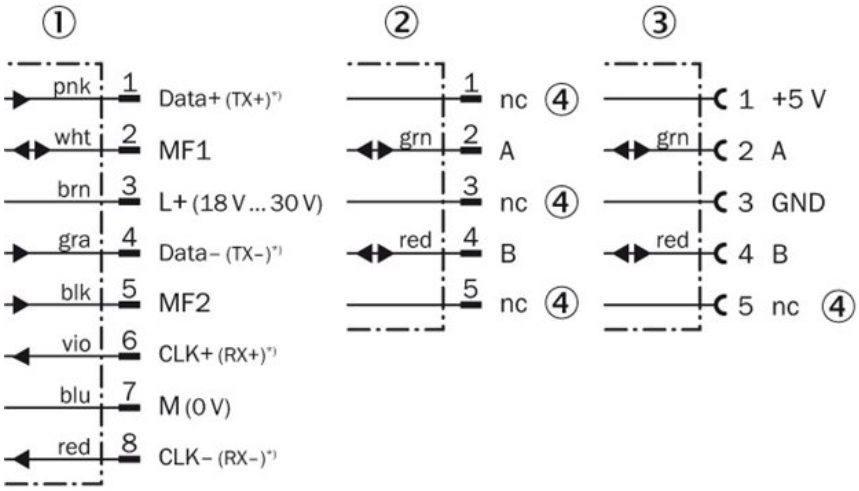


|1| Connector M16, 8-pin
|2| Connector M12, 5-pin, B-coded, BUS IN
|3| Connector M12, 5-pin, B-coded, BUS OUT
|4| not connected

*) For connection of interface adapter.


© SICK AG. Subject to change without notice.

A4 4c int43


**Australia**
Phone +61 3 9457 0600
1800 33 48 02 – tollfree
E-Mail sales@sick.com.au

**Belgium/Luxembourg**
Phone +32 (0)2 466 55 66
E-Mail info@sick.be

**Brasil**
Phone +55 11 3215-4900
E-Mail marketing@sick.com.br

**Canada**
Phone +1 905 771 14 44
E-Mail information@sick.com

**Česká republika**
Phone +420 2 57 91 18 50
E-Mail sick@sick.cz

**China**
Phone +86 4000 121 000
E-Mail info.china@sick.net.cn
Phone +852-2153 6300
E-Mail ghk@sick.com.hk

**Danmark**
Phone +45 45 82 64 00
E-Mail sick@sick.dk

**Deutschland**
Phone +49 211 5301-301
E-Mail info@sick.de

**España**
Phone +34 93 480 31 00
E-Mail info@sick.es

**France**
Phone +33 1 64 62 35 00
E-Mail info@sick.fr

**Great Britain**
Phone +44 (0)1727 831121
E-Mail info@sick.co.uk

**India**
Phone +91–22–4033 8333
E-Mail info@sick-india.com

**Israel**
Phone +972-4-6881000
E-Mail info@sick-sensors.com

**Italia**
Phone +39 02 27 43 41
E-Mail info@sick.it

**Japan**
Phone +81 (0)3 5309 2112
E-Mail support@sick.jp

**Magyarország**
Phone +36 1 371 2680
E-Mail office@sick.hu

**Nederland**
Phone +31 (0)30 229 25 44
E-Mail info@sick.nl

**Norge**
Phone +47 67 81 50 00
E-Mail sick@sick.no

**Österreich**
Phone +43 (0)22 36 62 28 8-0
E-Mail office@sick.at

**Polska**
Phone +48 22 837 40 50
E-Mail info@sick.pl

**România**
Phone +40 356 171 120
E-Mail office@sick.ro

**Russia**
Phone +7-495-775-05-30
E-Mail info@sick.ru

**Schweiz**
Phone +41 41 619 29 39
E-Mail contact@sick.ch

**Singapore**
Phone +65 6744 3732
E-Mail sales.gsg@sick.com

**Slovenija**
Phone +386 (0)1-47 69 990
E-Mail office@sick.si

**South Africa**
Phone +27 11 472 3733
E-Mail info@sickautomation.co.za

**South Korea**
Phone +82 2 786 6321/4
E-Mail info@sickkorea.net

**Suomi**
Phone +358-9-25 15 800
E-Mail sick@sick.fi

**Sverige**
Phone +46 10 110 10 00
E-Mail info@sick.se

**Taiwan**
Phone +886 2 2375-6288
E-Mail sales@sick.com.tw

**Türkiye**
Phone +90 (216) 528 50 00
E-Mail info@sick.com.tr

**United Arab Emirates**
Phone +971 (0) 4 88 65 878
E-Mail info@sick.ae

**USA/México**
Phone +1(952) 941-6780
1 (800) 325-7425 – tollfree
E-Mail info@sickusa.com


More representatives and agencies
at **www.sick.com**