Up to Category 4, EN 954-1
PNOZ X11P

Function description

- Single-channel operation: no redundancy in the input circuit, earth faults in the reset and input circuit are detected.
- Dual-channel operation with detection of shorts across contacts: redundant input circuit, detects
  - earth faults in the reset and input circuit,
  - short circuits in the input circuit and, with a monitored reset, in the reset circuit too,
  - shorts between contacts in the input circuit.
- Automatic start: Unit is active once the input circuit has been closed.
- Manual reset: Unit is active once the input circuit is closed and then the reset circuit is closed.
- Monitored reset: Unit is active once
  - the input circuit is closed and then the reset circuit is closed and opened again.
  - the reset circuit is closed and then opened again once the input circuit is closed.
- Increase in the number of available contacts by connecting contact expander modules or external contactors/relays.

Timing diagram

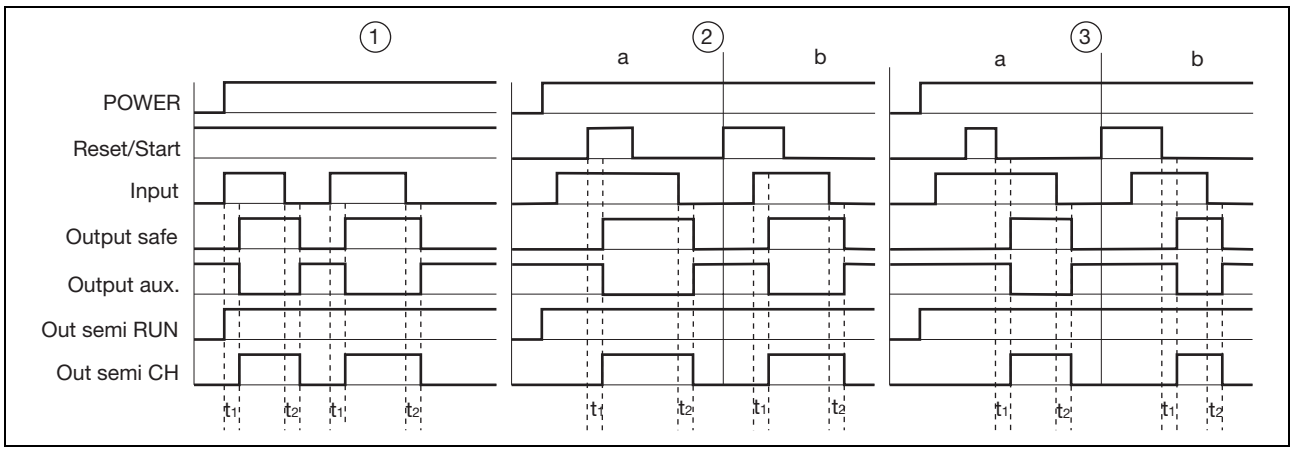

Key

- Power: Supply voltage
- Reset/start: Reset circuit S33-S34, S37
- Input: Input circuits S11-S12, S21-S22, S31-S32
- Output safe: Safety contacts 13-14, 23-24, 33-34, 43-44, 53-54, 63-64, 73-74
- Output aux: Auxiliary contacts 81-82
- Out semi RUN: Semiconductor output supply voltage Y35
- Out semi CH: Semiconductor output switch status Y32
- ①: Automatic reset
- ②: Manual reset
- ③: Monitored reset
- a: Input circuit closes before reset circuit
- b: Reset circuit closes before input circuit
- t_1: Switch-on delay
- t_2: Delay-on de-energisation

Wiring

Please note:

- Information given in the “Technical details” must be followed.
- Outputs 13-14, 23-24, 33-34, 43-44, 53-54, 63-64, 73-74 are safety contacts, output 81-82 is an auxiliary contact (e.g. for display).
- To prevent contact welding, a fuse should be connected before the output contacts (see technical details).
- Calculation of the max. cable runs l_{max} in the input circuit:

$$l_{max} = \frac{R_{lmax}}{R_l / km}$$

R_{lmax} = max. overall cable resistance (see technical details)
R_l / km = cable resistance/km

- Use copper wire that can withstand 60/75 °C.
- Sufficient fuse protection must be provided on all output contacts with capacitive and inductive loads.

Up to Category 4, EN 954-1
PNOZ X11P

Preparing for operation

- Supply voltage

Supply voltage	AC	DC
	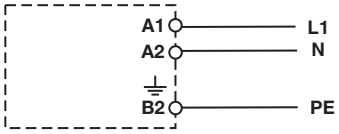	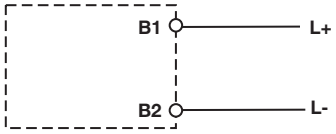

- Input circuit

Input circuit	Single-channel	Dual-channel
E-STOP **without** detection of shorts across contacts	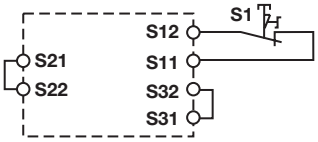	
E-STOP **with** detection of shorts across contacts	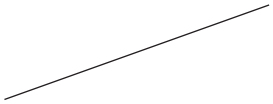	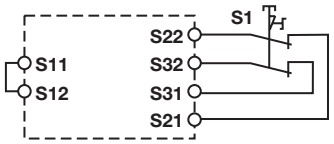
Safety gate **without** detection of shorts across contacts	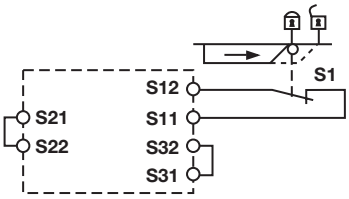	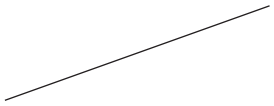
Safety gate **with** detection of shorts across contacts		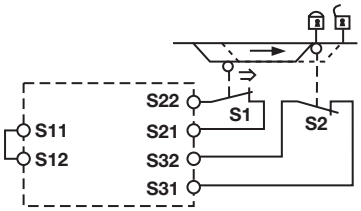

Up to Category 4, EN 954-1
PNOZ X11P

▸ Reset circuit

Reset circuit	E-STOP wiring (single-channel) Safety gate (single-channel)	E-STOP wiring (dual-channel) Safety gate (dual-channel)
Automatic reset		
Manual reset	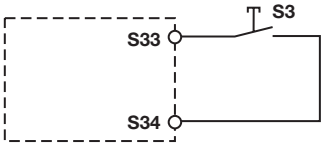	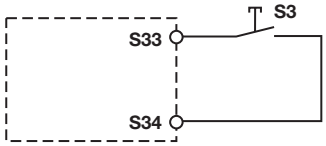
Monitored reset	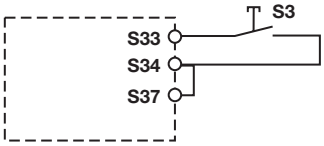	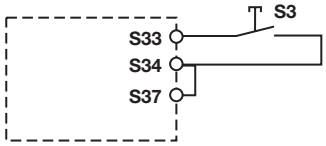

▸ Feedback loop

Feedback loop	Automatic reset	Monitored reset
Contacts from external contactors	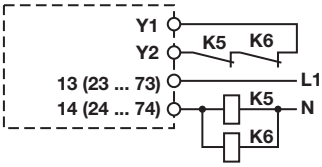	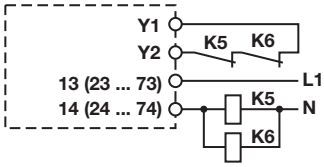

▸ Semiconductor output

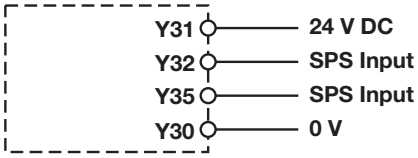

▸ Key

S1/S2	E-STOP/safety gate switch
S3	Reset button
⇑	Switch operated
🔓	Gate open
🔒	Gate closed

Up to Category 4, EN 954-1
PNOZ X11P

Terminal configuration

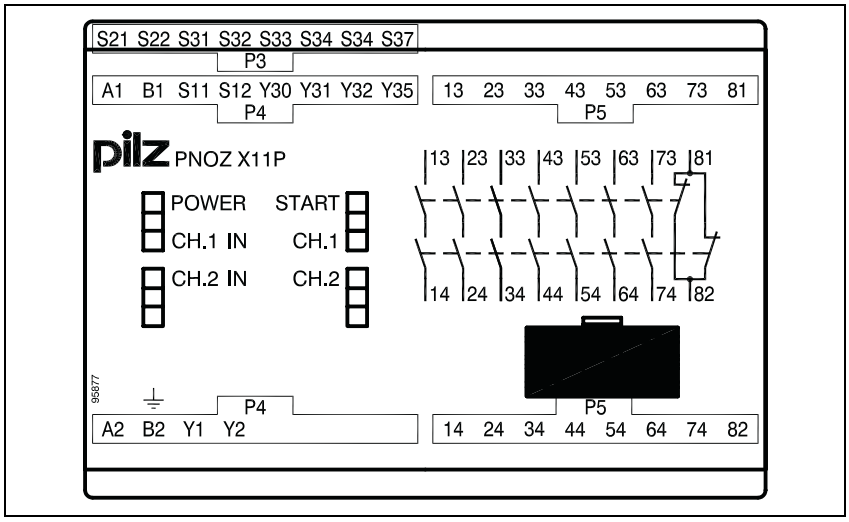

Installation

- The safety relay should be installed in a control cabinet with a protection type of at least IP54.
- Use the notch on the rear of the unit to attach it to a DIN rail.
- Ensure the unit is mounted securely on a vertical DIN rail (35 mm) by using a fixing element (e.g. retaining bracket or an end angle).

Dimensions

* with cage clamp terminals

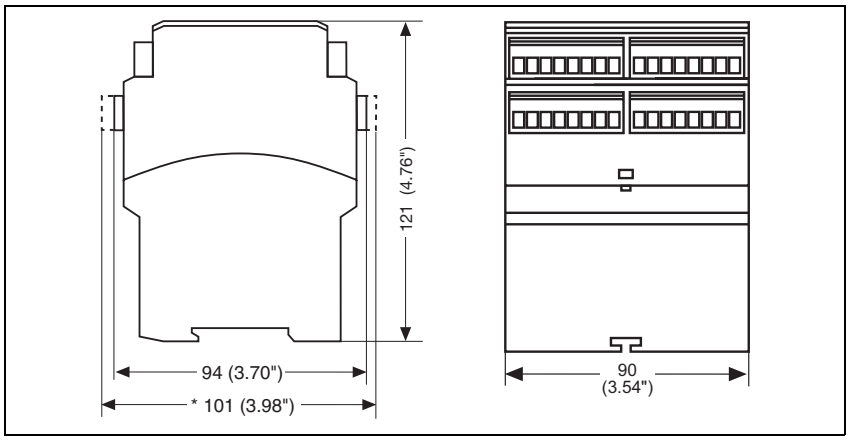

Up to Category 4, EN 954-1

PNOZ X11P

Notice

This data sheet is only intended for use during configuration. For installation and operation, please refer to the operating instructions supplied with the unit.

Service life graph

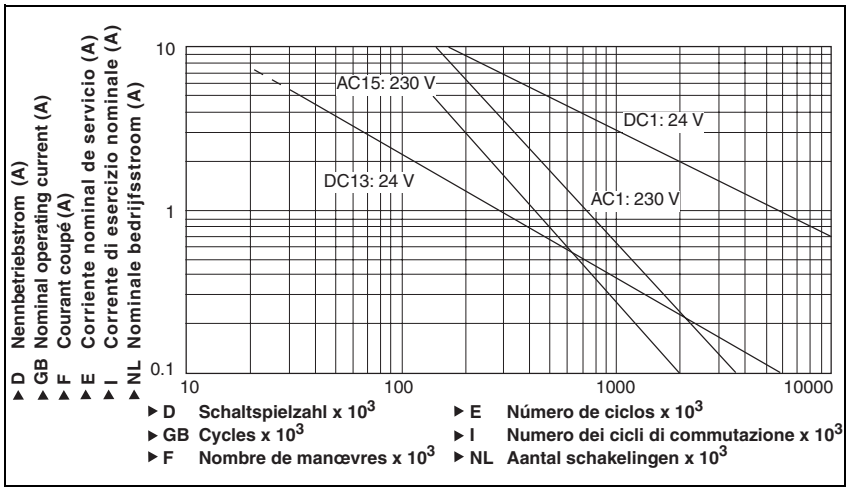

Technical details

Electrical data	
Supply voltage	
Supply voltage U_B AC	**24 V**, **110 - 120 V**, **230 - 240 V**
Supply voltage U_B DC	**24 V**
Voltage tolerance	**-15 %/+10 %**
Power consumption at U_B AC	**9.0 VA**
Power consumption at U_B DC	**3.5 W**
Frequency range AC	**50 - 60 Hz**
Residual ripple DC	**160 %**
Voltage and current at	
Input circuit DC: **24.0 V**	**50.0 mA**
Reset circuit DC: **24.0 V**	**70.0 mA**
Feedback loop DC: **24.0 V**	**70.0 mA**
Output contacts in accordance with **EN 954-1** Category **4**	Safety contacts (N/O): **7** Auxiliary contacts (N/C): **1**
Utilisation category in accordance with **EN 60947-4-1**	
Safety contacts: AC1 at **240 V**	I_{min}: **0.01 A** , I_{max}: **8.0 A** P_{max}: **2000 VA**
Safety contacts: DC1 at **24 V**	I_{min}: **0.01 A** , I_{max}: **8.0 A** P_{max}: **200 W**
Auxiliary contacts: AC1 at **240 V**	I_{min}: **0.01 A** , I_{max}: **8.0 A** P_{max}: **2000 VA**
Auxiliary contacts: DC1 at **24 V**	I_{min}: **0.01 A** , I_{max}: **8.0 A** P_{max}: **200 W**
Utilisation category in accordance with **EN 60947-5-1**	
Safety contacts: AC15 at **230 V**	I_{max}: **5.0 A**
Safety contacts: DC13 at **24 V** (6 cycles/min)	I_{max}: **7.0 A**
Auxiliary contacts: AC15 at **230 V**	I_{max}: **5.0 A**
Auxiliary contacts: DC13 at **24 V** (6 cycles/min)	I_{max}: **7.0 A**
Contact material	**AgSnO2 + 0.2 µm Au**

Up to Category 4, EN 954-1
PNOZ X11P

Electrical data	
External contact fuse protection to **EN 60947-5-1**	
Blow-out fuse, quick	
Safety contacts:	**10 A**
Auxiliary contacts:	**10 A**
Blow-out fuse, slow	
Safety contacts:	**6 A**
Auxiliary contacts:	**6 A**
Circuit breaker 24 VAC/DC, characteristic B/C	
Safety contacts:	**6 A**
Auxiliary contacts:	**6 A**
Semiconductor outputs (short circuit proof)	**24.0 V** DC, **20 mA**
External supply voltage	**24.0 V** DC
Voltage tolerance	**-20 %/+20 %**
Max. overall cable resistance R_{lmax} input circuits, reset circuits	
single-channel at U_B DC	**50 Ohm**
single-channel at U_B AC	**100 Ohm**
dual-channel with detect. of shorts across contacts at U_B DC	**15 Ohm**
dual-channel with detect. of shorts across contacts at U_B AC	**20 Ohm**
Times	
Switch-on delay	
with automatic reset typ.	**450 ms**
with automatic reset max.	**680 ms**
with automatic reset after power on typ.	**450 ms**
with automatic reset after power on max.	**630 ms**
with manual reset typ.	**450 ms**
with manual reset max.	**680 ms**
with monitored reset typ.	**390 ms**
with monitored reset max.	**550 ms**
Delay-on de-energisation	
with E-STOP typ.	**17 ms**
with E-STOP max.	**30 ms**
with power failure typ.	**40 ms**
with power failure max.	**60 ms**
Recovery time at max. switching frequency 1/s	
after E-STOP	**50 ms**
after power failure	**100 ms**
Min. start pulse duration with a monitored reset	**30 ms**
Simultaneity, channel 1 and 2	∞
Supply interruption before de-energisation	**20 ms**
Environmental data	
EMC	**EN 60947-5-1**, **EN 61000-6-2**
Vibration to **EN 60068-2-6**	
Frequency	**10 - 55 Hz**
Amplitude	**0.35 mm**
Climatic suitability	**EN 60068-2-78**
Airgap creepage	**EN 60947-1**
Ambient temperature	**-10 - 55 °C**
Storage temperature	**-40 - 85 °C**
Protection type	
Mounting (e.g. cabinet)	**IP54**
Housing	**IP40**
Terminals	**IP20**
Mechanical data	
Housing material	
Housing	**PPO UL 94 V0**
Front	**ABS UL 94 V0**

Up to Category 4, EN 954-1
PNOZ X11P

Mechanical data	
Max. cross section of external conductors with screw terminals	
1 core flexible	**0.25 - 2.50 mm² , 24 - 12 AWG** Order no.: 777080, 777083, 777086
2 core, same cross section, flexible:	
with crimp connectors, without insulating sleeve	**0.25 - 1.00 mm² , 24 - 16 AWG** Order no.: 777080, 777083, 777086
without crimp connectors or with TWIN crimp connectors	**0.20 - 1.50 mm² , 24 - 16 AWG** Order no.: 777080, 777083, 777086
Torque setting with screw terminals	**0.50 Nm** Order no.: 777080, 777083, 777086
Max. cross section of external conductors with cage clamp terminals: Flexible without crimp connectors	**0.20 - 1.50 mm² , 24 - 16 AWG** Order no.: 787080, 787083, 787086
Cage clamp terminals: Terminal points per connection	**2** Order no.: 787080, 787083, 787086
Stripping length	**8 mm** Order no.: 787080, 787083, 787086
Dimensions	
Height	**101.0 mm** Order no.: 787080, 787083, 787086 **94.0 mm** Order no.: 777080, 777083, 777086
Width	**90.0 mm**
Depth	**121.0 mm**
Weight	**630 g** Order no.: 787080, 787083, 787086 **640 g** Order no.: 777080, 777083, 777086

The standards current on **03/04** apply.

Max. continuous current

Number of contacts	I_{max} (A) at U_B DC	I_{max} (A) at U_B AC
1	**8.00 A**	**8.00 A**
2	**8.00 A**	**8.00 A**
3	**8.00 A**	**6.80 A**
4	**7.20 A**	**5.90 A**
5	**6.50 A**	**5.30 A**
6	**5.90 A**	**4.80 A**
7	**5.50 A**	**4.50 A**

Order reference

Type	Features		Terminals	Order no.
PNOZ X11P C	24 VAC/DC		Cage clamp terminals	787 080
PNOZ X11P	24 VAC/DC		Screw terminals	777 080
PNOZ X11P C	110 - 120 VAC	24 VDC	Cage clamp terminals	787 083
PNOZ X11P	110 - 120 VAC	24 VDC	Screw terminals	777 083
PNOZ X11P C	230 - 240 VAC	24 VDC	Cage clamp terminals	787 086
PNOZ X11P	230 - 240 VAC	24 VDC	Screw terminals	777 086